EPL-SS and EPL-BW Series

Sensor Wells

EPL-SS / EPL-BW
User Manual · V1.0
23.09.2026



SAFETY WARNINGS

Read this user manual carefully before using wells.

⚠ Store the product in a dry environment; otherwise a fault may occur.

Energyplus Teknoloji accepts no liability for such situations caused by the user.

SYMBOLS

SYMBOL DESCRIPTIONS	
!	Used for important points in the following sections.
CE	Indicates that the product complies with the relevant EU directives.
♻	The product must not be treated as normal household waste; it must be handed over to a collection point for the recycling of electronic equipment.

The legal owner of this document and its revisions is Energyplus Teknoloji. Unauthorised reproduction or modification is prohibited.

1. DESCRIPTION

Sensor wells are designed to securely integrate temperature sensors into the system, protect them from physical damage, and enable precise temperature measurements without causing system downtime.

Key Features

◦ To meet varying pressure, temperature, and corrosion requirements across different applications, they are produced using a one-piece, non-welded manufacturing process and are available in Stainless Steel and Brass.

* For special orders, package contents may vary depending on the project or customer request.



Figure 1.1

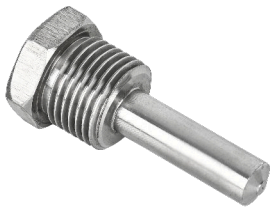

Figure 1.2

2. TECHNICAL SPECIFICATIONS

GENERAL	
Model	EPL-SS / EPL-BW SERIES

Technic	
Well's head	Hex head (AF22)

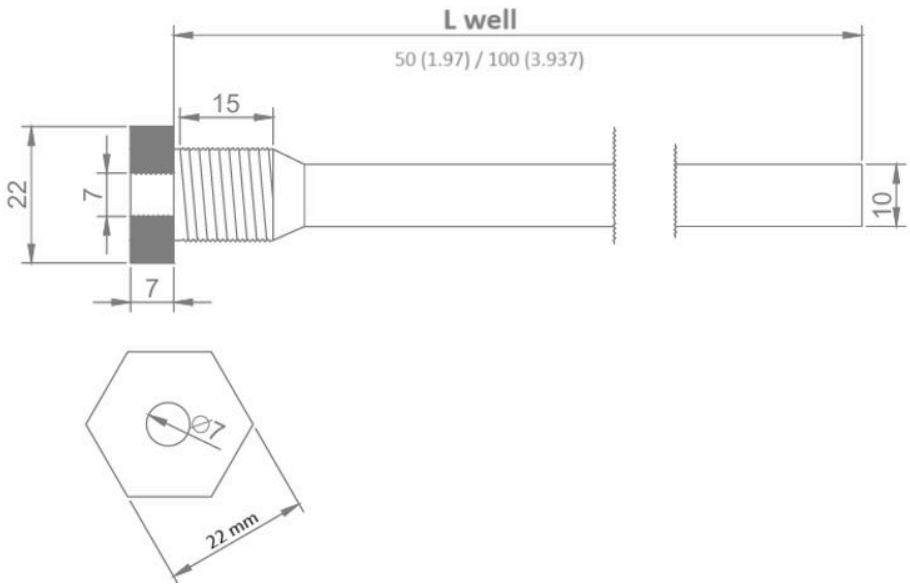

Figure 2.1 - Dimensions

3. INSTALLATION

1. The supplied well has a 22 mm hex head (AF22). Tighten using a 22 mm wrench.

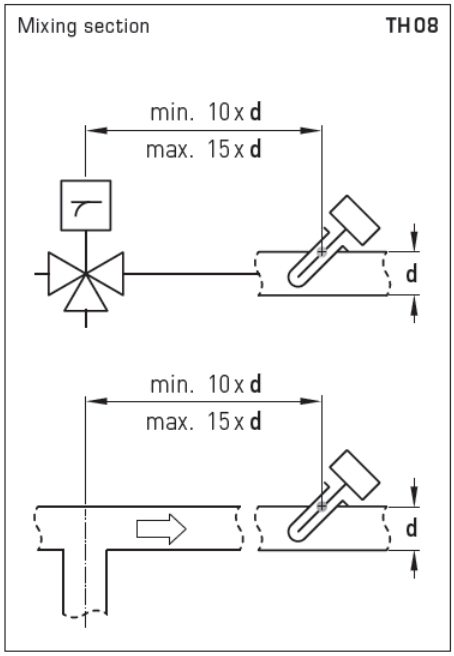

Figure 3.1 – Sensor Wells installation

4. INSTALLATION WARNINGS

⚠ Installation and maintenance must be carried out only by qualified technical personnel.

5. DIMENSIONS

Dimensions (High): 50 - 100 - 150 mm · Weight: 350 g

Dimensional drawing to be prepared. [DRAWING]

Energyplus® Teknoloji A.Ş.
Oruçreis Mah. Tekstilkent Cad. T-10 Blok No: 315 Esenler / Istanbul / Türkiye
90 212 909 98 10
https://www.energyplusstore.com info@energyplusstore.com